A120 /STUDY

Material

Door1 : 18mm PB(GM5029高山流水)
Door3 : Glass（黑色铝框+小灯芯玻璃）
Carcass1 :18mm PB(GM5029高山流水)

Stone : 本地制作

Handle :客户自备
Toe Kick:WOOD 木板（与柜体同色）全部独立地台
DRW&HNG : DTC soft close

黑色铝框+小灯芯玻璃

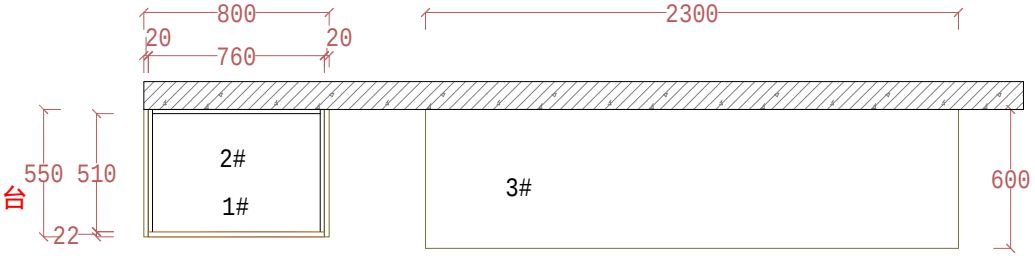

PLAN VIEW
floor

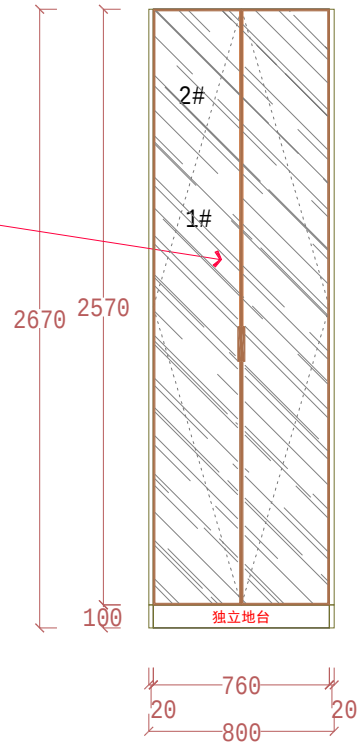

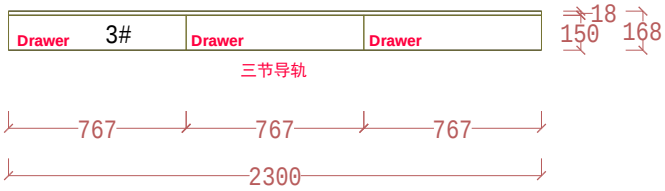

OUTSIDE VIEW

BENSON

DESIGN FIRM
Benson Cabinetry (Foshan) Co., Ltd.

This drawing is copyright
Contractors shall work from figured dimensions only
Contractors must check all dimensions on site
Contractors must be reported immediately to architects

Customer Signature

Project incharge signature

Approved by

Date:

A120 /STUDY

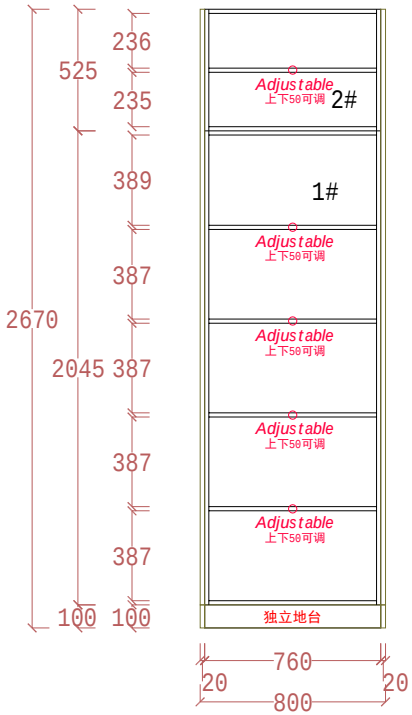

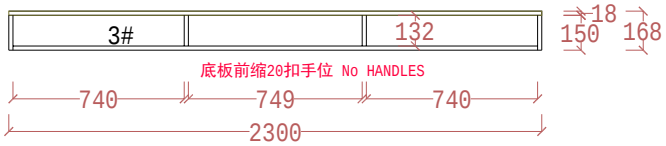

INNER VIEW

BENSON

DESIGN FIRM
Benson Cabinetry (Foshan) Co., Ltd.

This drawing is copyright
Contractors shall work from figured dimensions only
Contractors must check all dimensions on site
Contractors must be reported immediately to architects

Customer Signature

Project incharge signature

Approved by

Date:

A120 /KITCHEN

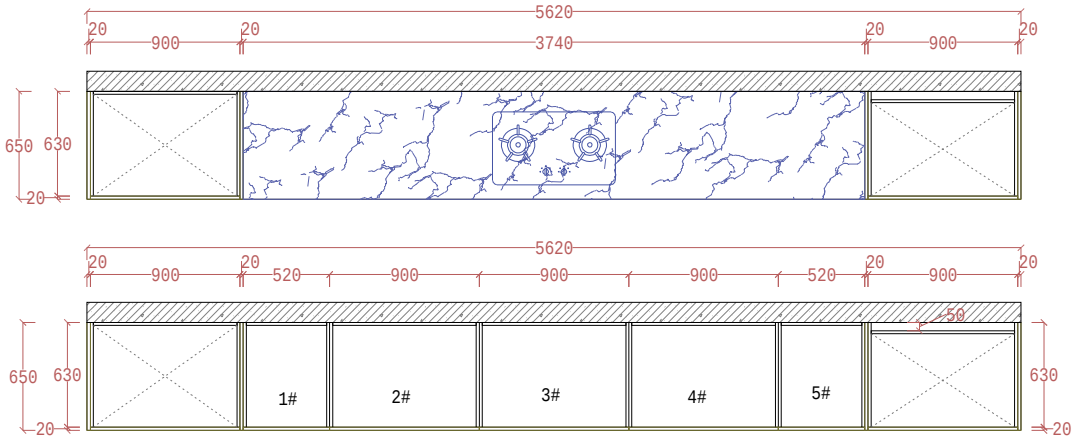

PLAN VIEW
floor

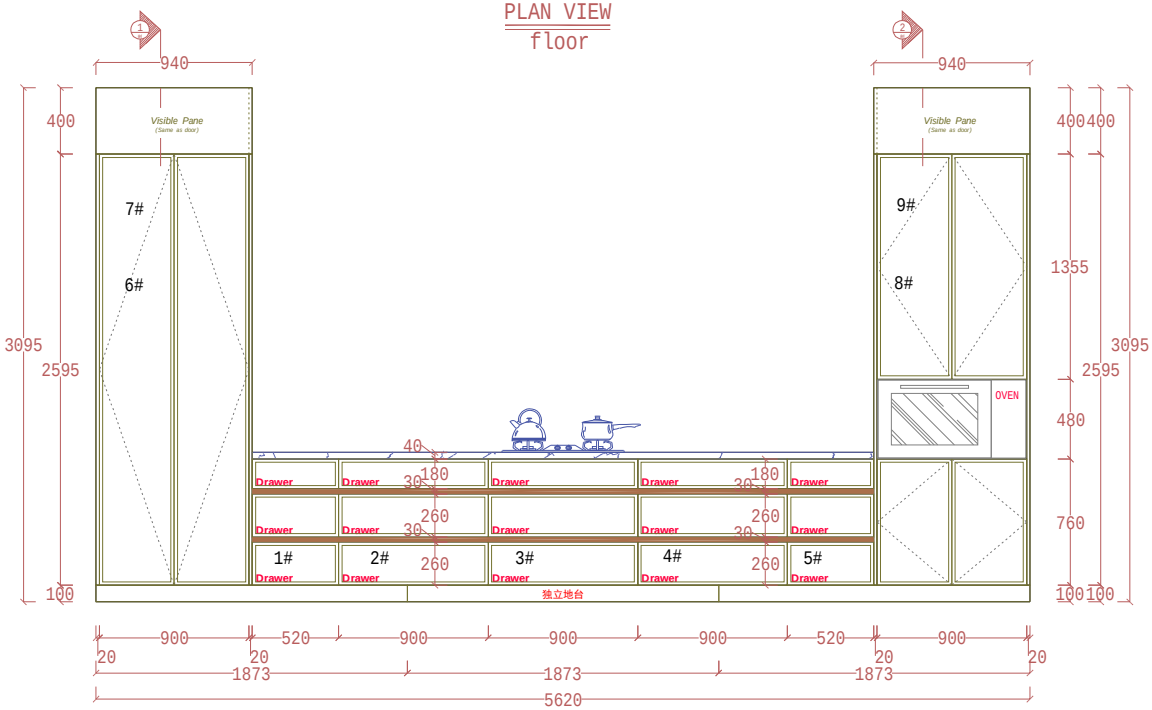

ELEVATION

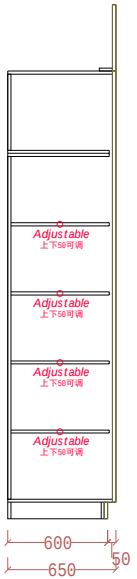

SECTION VIEW 1

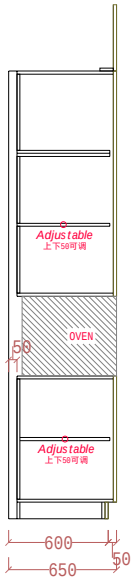

SECTION VIEW 2

Material

Door1 : Matt white lacquer finish （白色哑光烤漆造型门）

Carcass1 :White melamine board 颗粒板白色（与门板接近）

Stone : 本地制作

*Handle :*客户自备

Toe Kick:WOOD 木板（与柜体同色）全部独立地台

DRW&HNG : DTC soft close

门型:X-14

Drawers handleless;
door handles client-supplied.

BENSON

DESIGN FIRM
Benson Cabinetry (Foshan) Co., Ltd.

This drawing is copyright
Contractors shall work from figured dimensions only
Contractors must check all dimensions on site
Contractors must be reported immediately to architects

Customer Signature

Project incharge signature

Approved by

Date:

A120 /KITCHEN

Material

Door1 : Matt white lacquer finish （白色哑光烤漆造型门）

Carcass1 :White melamine board 颗粒板白色（与门板接近）

门型:X-14

Stone : 本地制作

Handle :客户自备

Toe Kick:WOOD 木板（与柜体同色）全部独立地台

DRW&HNG : DTC soft close

Drawers handleless;
door handles client-supplied.

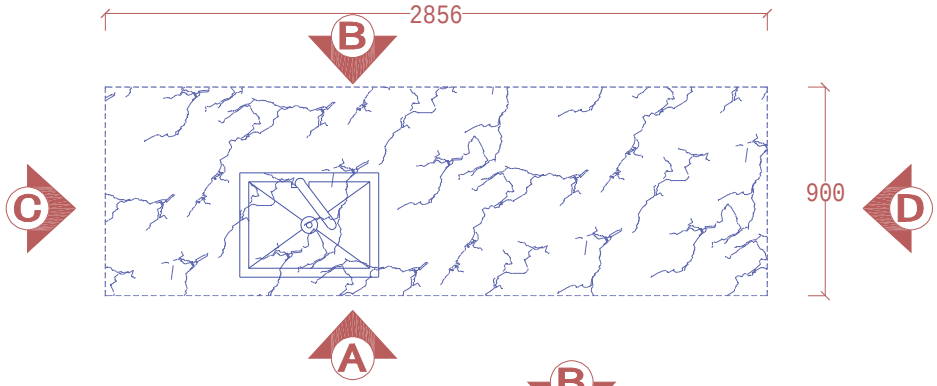

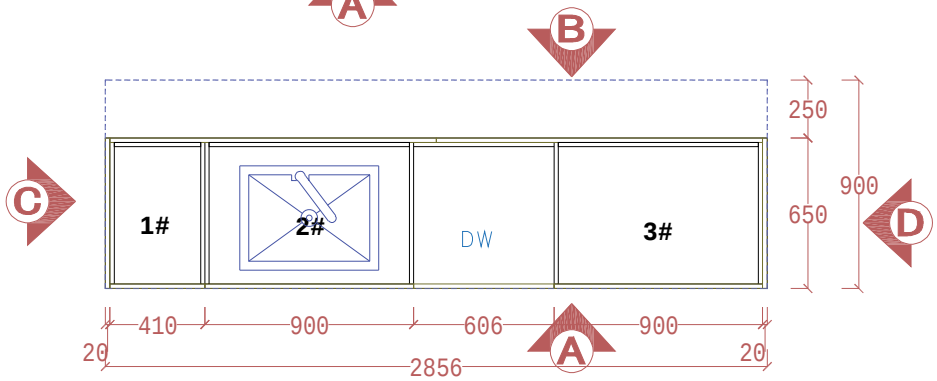

PLAN VIEW
floor

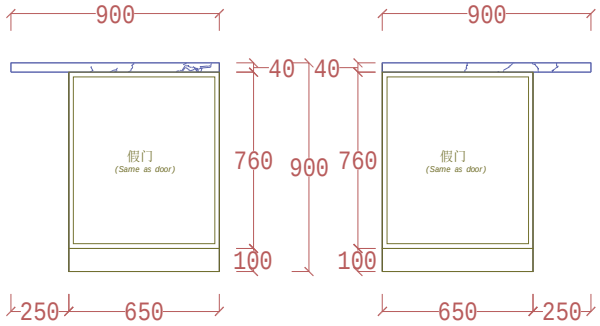

ELEVATION C

ELEVATION D

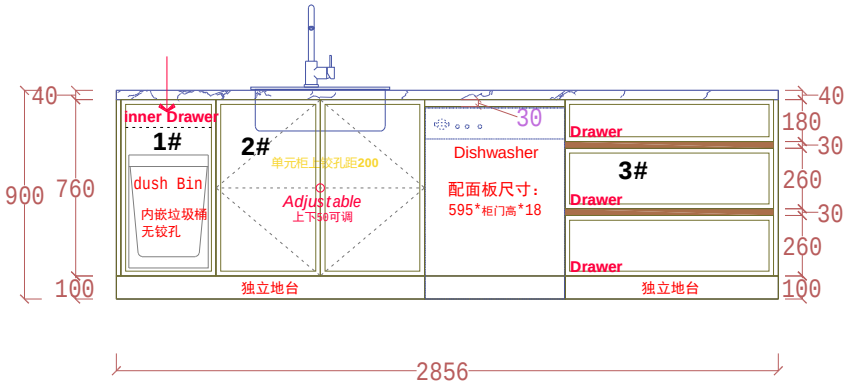

ELEVATION A

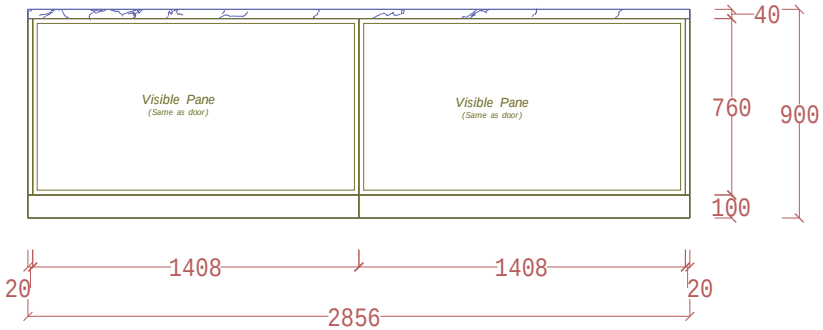

ELEVATION B

BENSON

DESIGN FIRM
Benson Cabinetry (Foshan) Co., Ltd.

This drawing is copyright
Contractors shall work from figured dimensions only
Contractors must check all dimensions on site
Contractors must be reported immediately to architects

Customer Signature

Project incharge signature

Approved by

Date:

A120 /PANTRY

Material

Door1 : Matt white lacquer finish （白色哑光烤漆造型门）

Carcass1 :White melamine board 颗粒板白色（与门板接近）

Stone : 本地制作

*Handle :*客户自备

Toe Kick:WOOD 木板（与柜体同色）全部独立地台

DRW&HNG : DTC soft close

门型:X-14

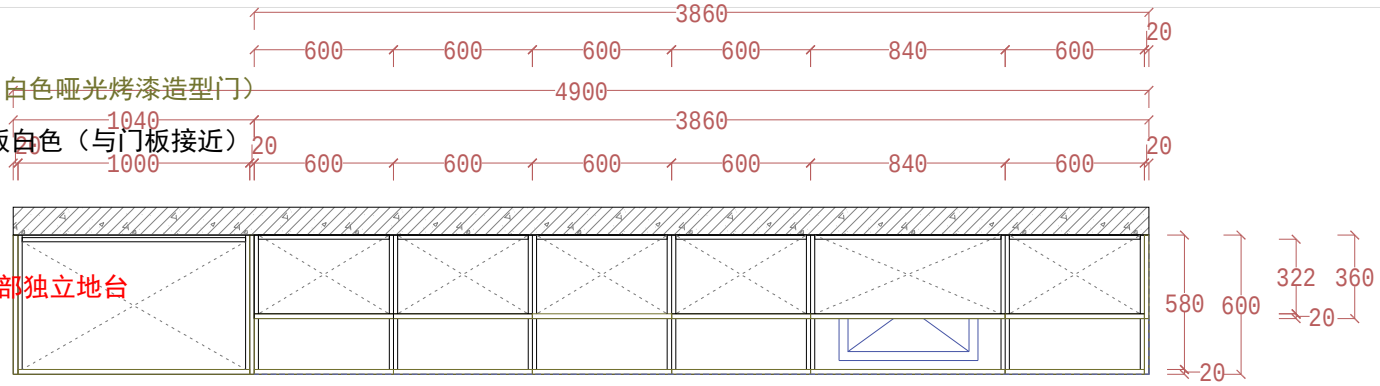

PLAN VIEW

floor

Drawers handleless;
door handles client-supplied

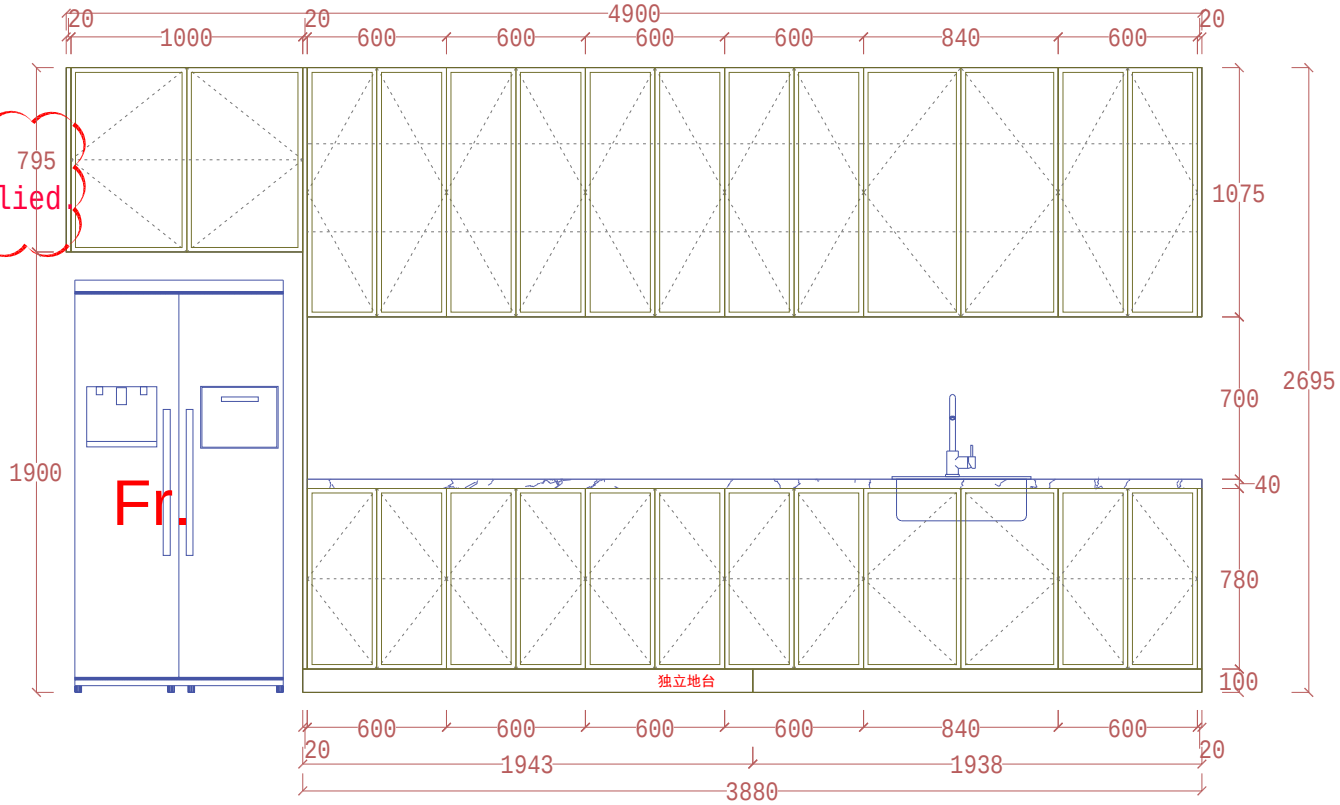

ELEVATION

BENSON

DESIGN FIRM
Benson Cabinetry (Foshan) Co., Ltd.

This drawing is copyright
Contractors shall work from figured dimensions only
Contractors must check all dimensions on site
Contractors must be reported immediately to architects

Customer Signature

Project incharge signature

Approved by

Date:

A120 /LUNDRY

Material

Door1 : Matt white lacquer finish （白色哑光烤漆造型门）

Carcass1 :White melamine board 颗粒板白色（与门板接近）

Stone : 本地制作

*Handle :*客户自备

Toe Kick:WOOD 木板（与柜体同色）全部独立地台

DRW&HNG : DTC soft close

门型:X-14

Drawers handleless;
door handles client-supplied.

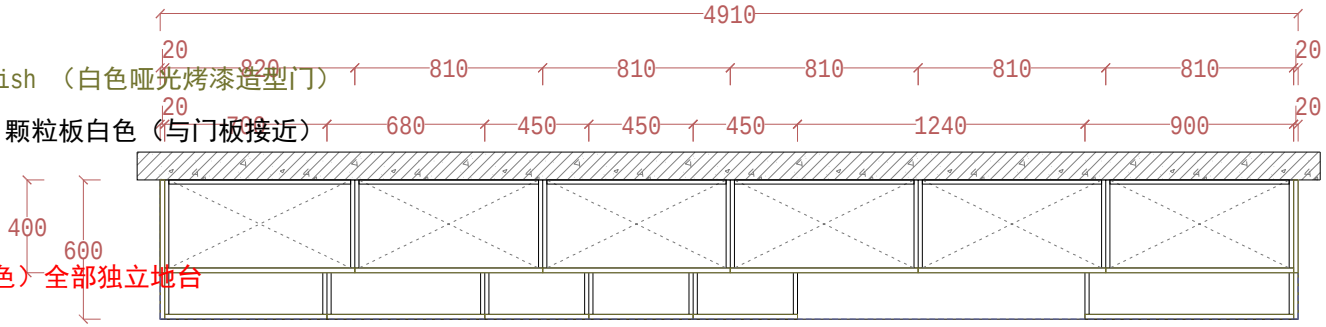

PLAN VIEW
floor

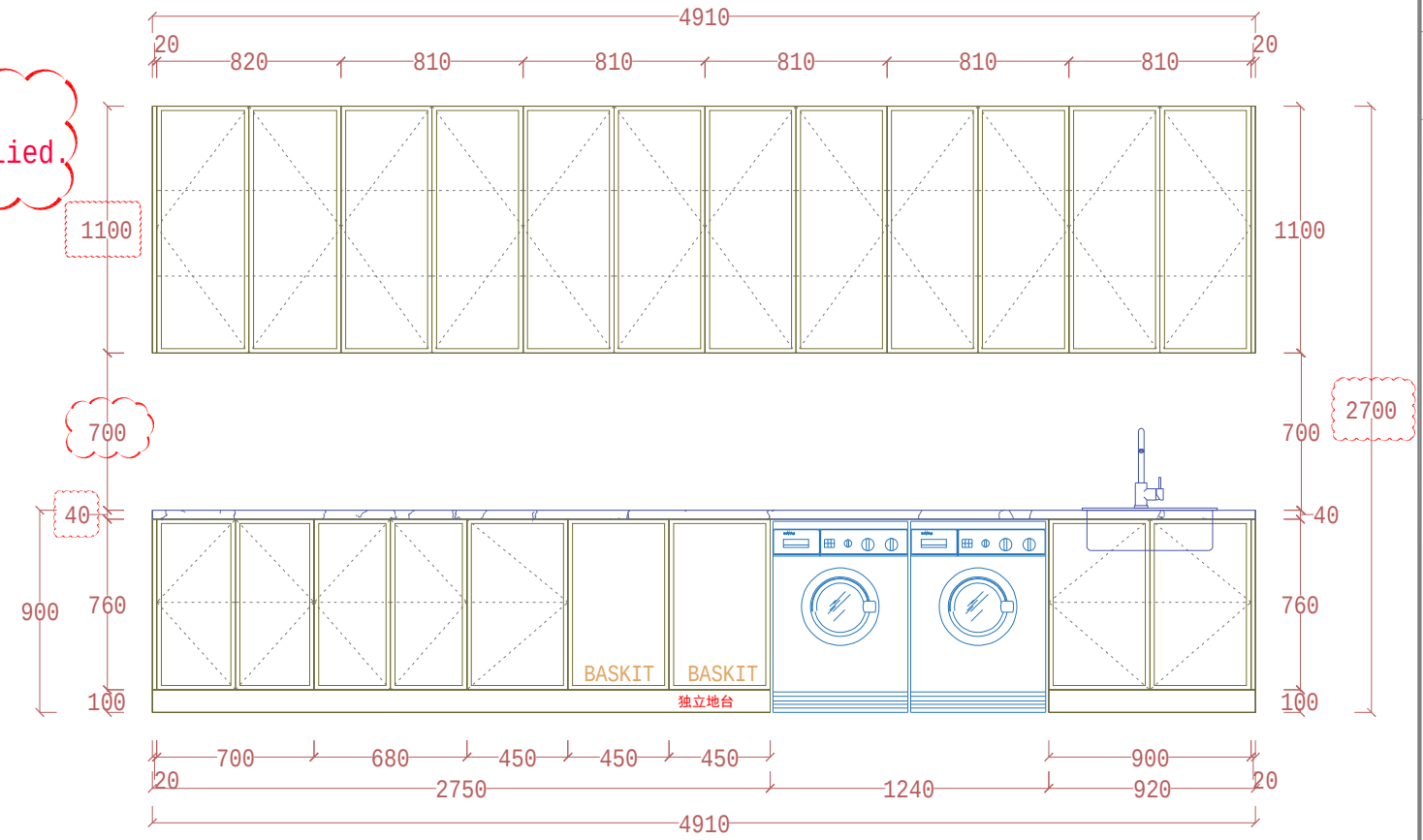

ELEVATION

BENSON

DESIGN FIRM
Benson Cabinetry (Foshan) Co., Ltd.

This drawing is copyright
Contractors shall work from figured dimensions only
Contractors must check all dimensions on site
Contractors must be reported immediately to architects

Customer Signature

Project incharge signature

Approved by

Date:

A120 /LUNDRY-1

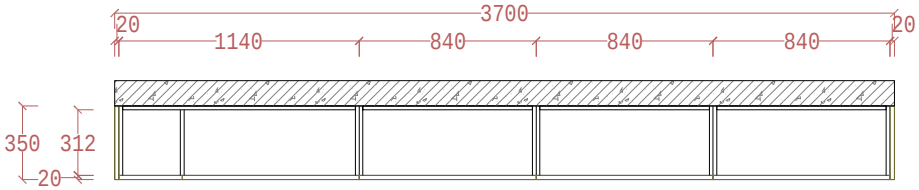

PLAN VIEW
floor

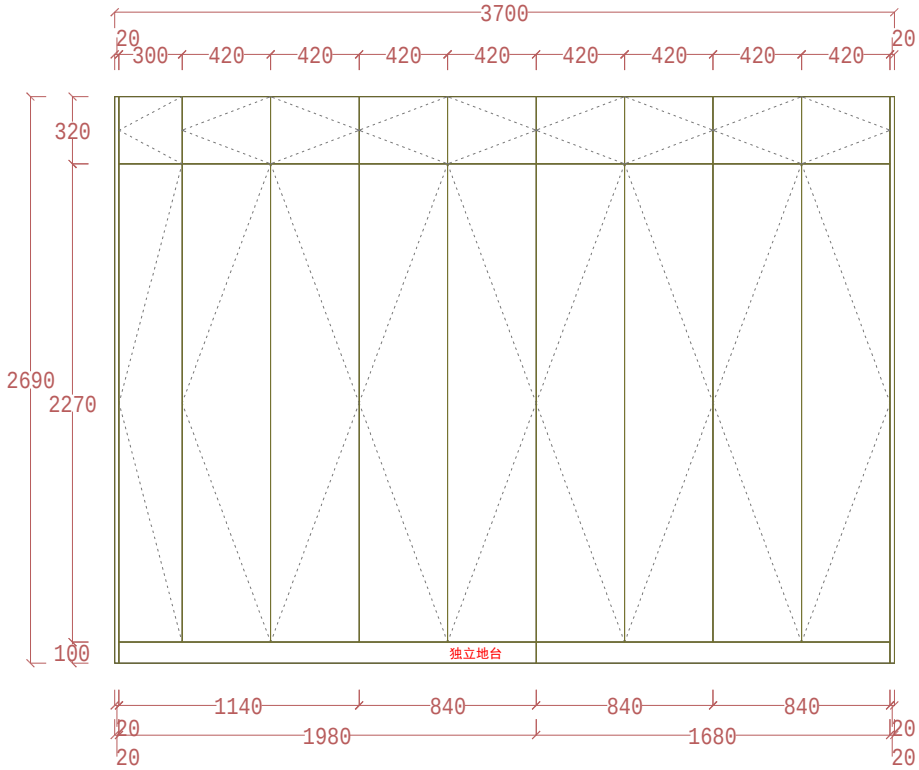

OUTSIDE VIEW

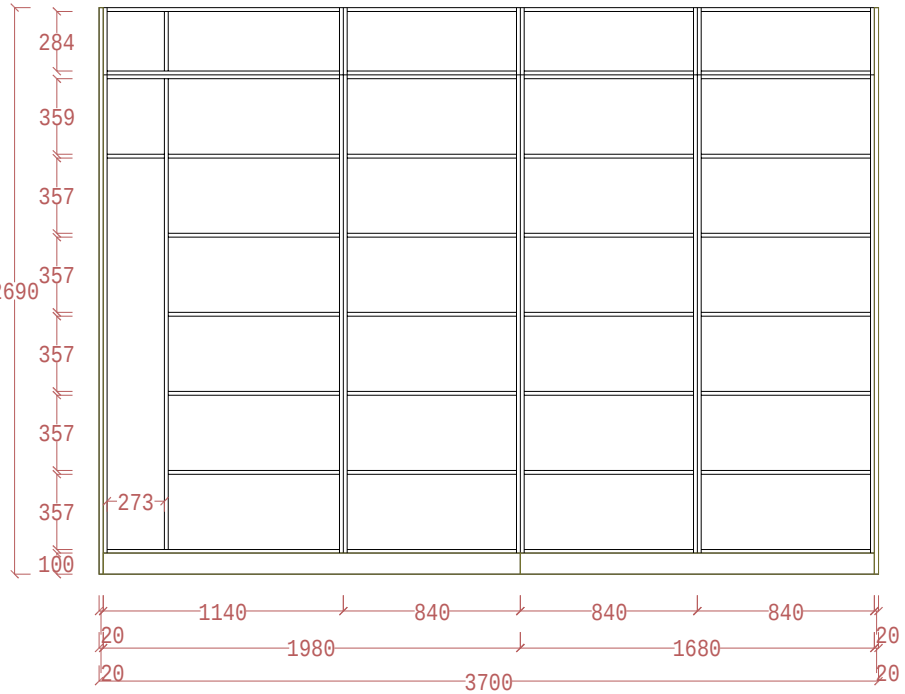

INNER VIEW

Material

Door1 : 18mm PB(GM6001乔木世家)

Carcass1 :18mm PB(GM6001乔木世家)

Handle :客户自备
Toe Kick:WOOD 木板（与柜体同色）全部独立地台
DRW&HNG : DTC soft close

ALL handles client-supplied.

BENSON

DESIGN FIRM
Benson Cabinetry (Foshan) Co., Ltd.

This drawing is copyright
Contractors shall work from figured dimensions only
Contractors must check all dimensions on site
Contractors must be reported immediately to architects

Customer Signature

Project incharge signature

Approved by

Date:

A120 /MASTER BEDROOM

Material

Door1 : 18mm PB(GM6001乔木世家)

Carcass1 :18mm PB(GM6001乔木世家)

Handle :客户自备
Toe Kick:WOOD 木板（与柜体同色）全部独立地台
DRW&HNG : DTC soft close

ALL handles client-supplied.

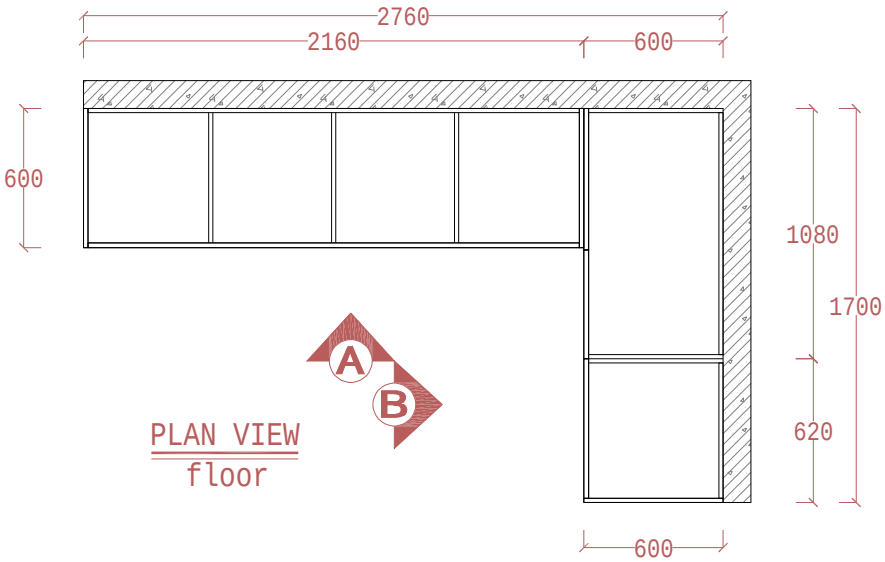

BENSON

DESIGN FIRM
Benson Cabinetry (Foshan) Co., Ltd.

This drawing is copyright
Contractors shall work from figured dimensions only
Contractors must check all dimensions on site
Contractors must be reported immediately to architects

Customer Signature

Project incharge signature

Approved by

Date:

A120 /MASTER BEDROOM

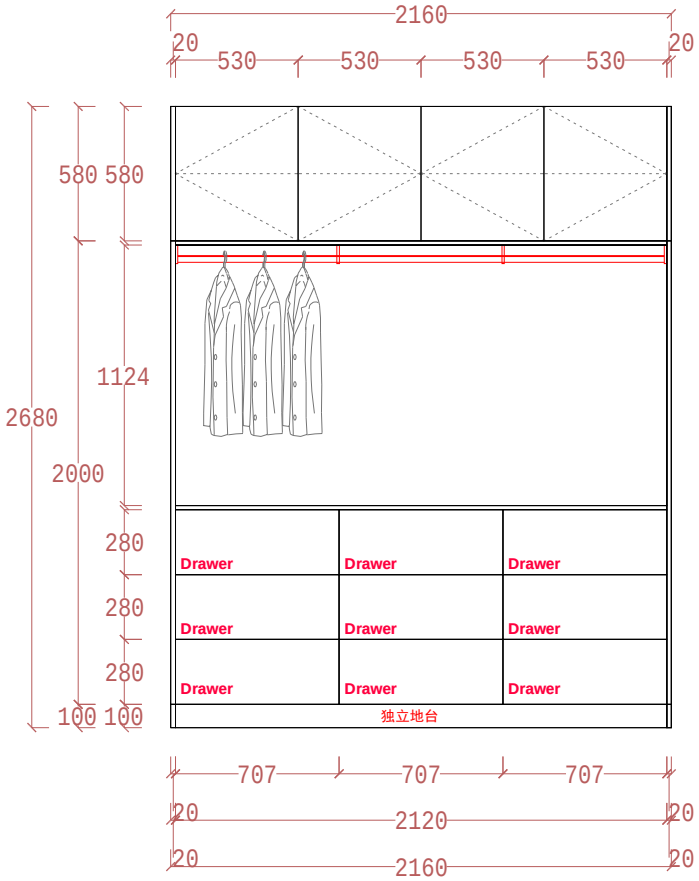

OUTSIDE VIEW A

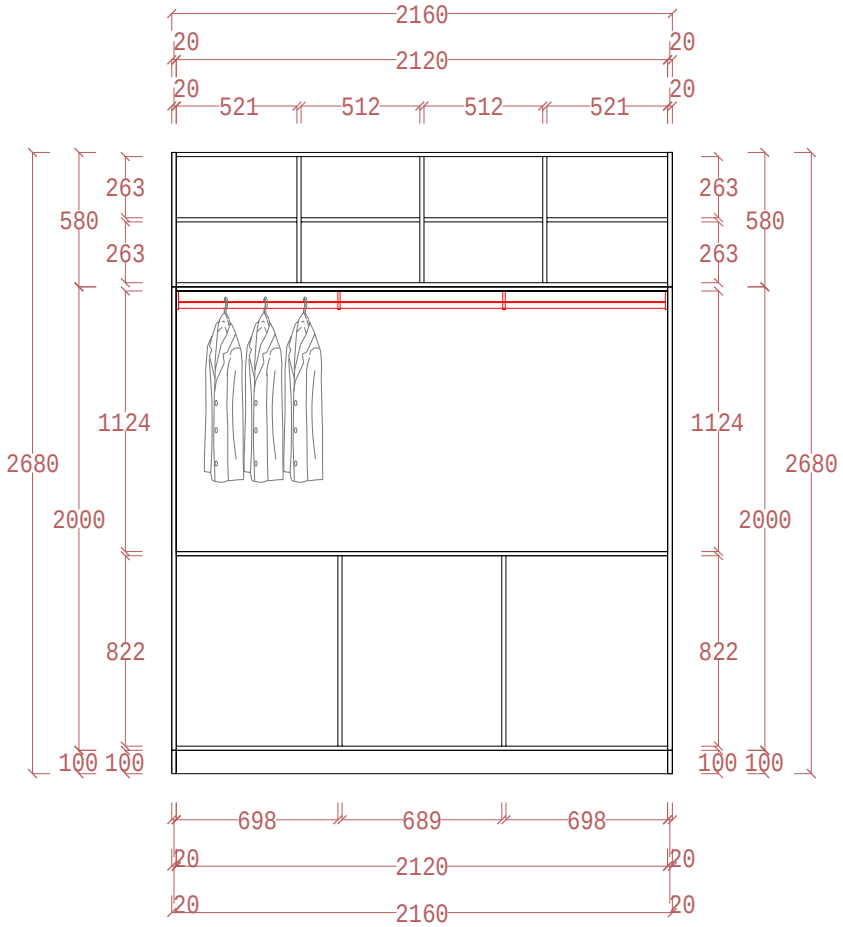

INNER VIEW A

BENSON

DESIGN FIRM
Benson Cabinetry (Foshan) Co., Ltd.

This drawing is copyright
Contractors shall work from figured dimensions only
Contractors must check all dimensions on site
Contractors must be reported immediately to architects

Customer Signature

Project incharge signature

Approved by

Date:

A120 /MASTER BEDROOM

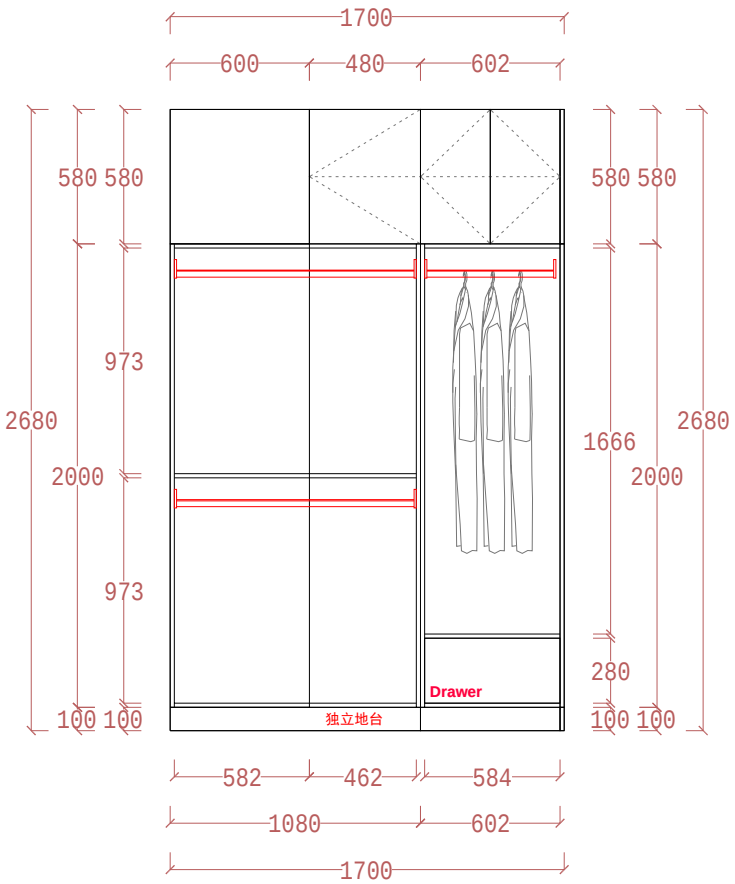

OUTSIDE VIEW B

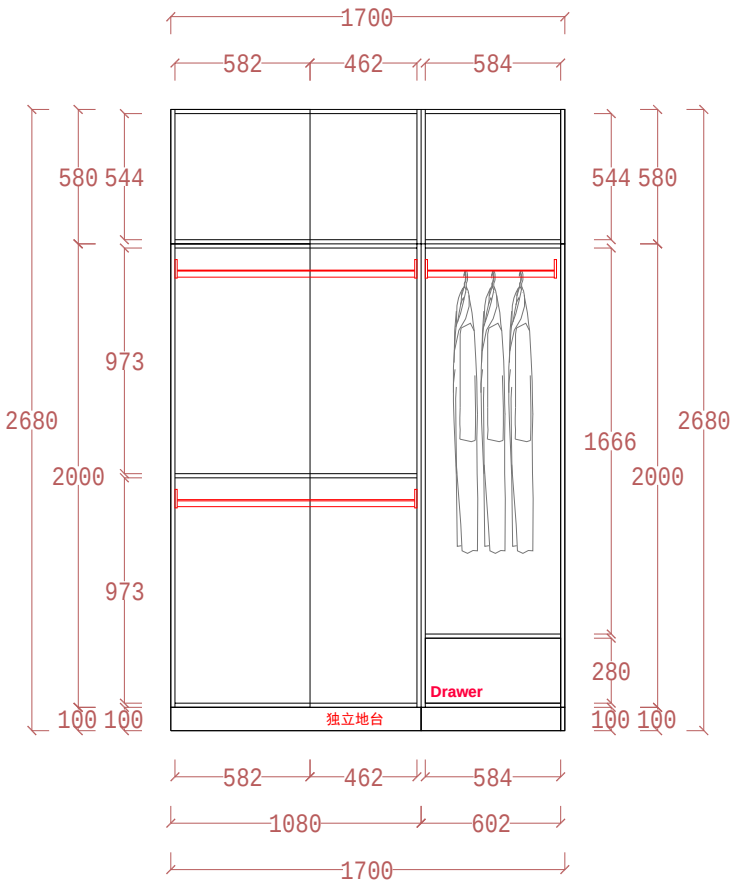

INNER VIEW B

BENSON

DESIGN FIRM
Benson Cabinetry (Foshan) Co., Ltd.

This drawing is copyright
Contractors shall work from figured dimensions only
Contractors must check all dimensions on site
Contractors must be reported immediately to architects

Customer Signature

Project incharge signature

Approved by

Date:

A120 /BED2 ENSUITE ISLAND

BENSON

DESIGN FIRM
Benson Cabinetry (Foshan) Co., Ltd.

This drawing is copyright
Contractors shall work from figured dimensions only
Contractors must check all dimensions on site
Contractors must be reported immediately to architects

Material

Door1 : 18mm PB(GM6001乔木世家)

Carcass1 :18mm PB(GM6001乔木世家)

Stone : 本地制作

*Handle :*客户自备

Toe Kick:WOOD 木板（与柜体同色）全部独立地台

DRW&HNG : DTC soft close

ALL handles client-supplied.

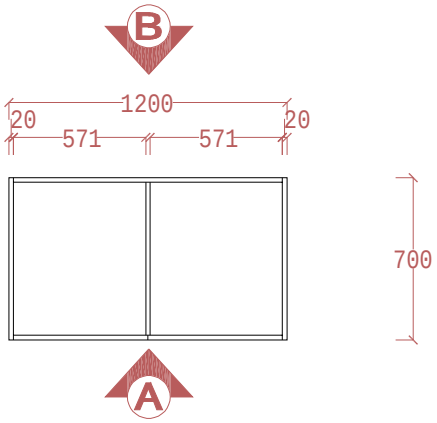

PLAN VIEW
floor

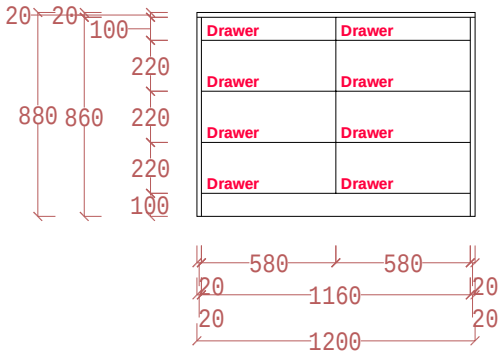

ELEVATION A

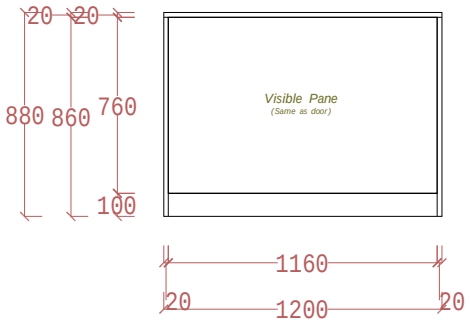

ELEVATION B

Customer Signature

Project incharge signature

Approved by

Date:

A120 /ENSUITE VANITY

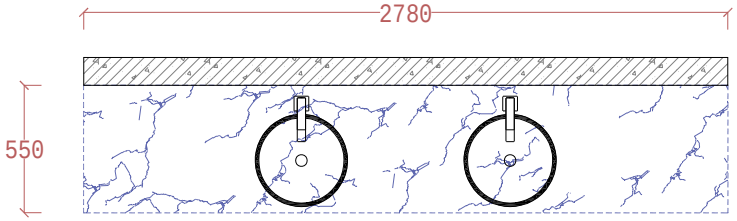

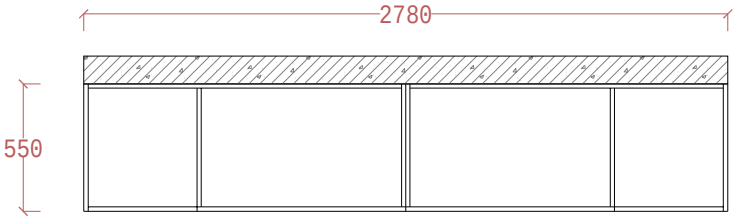

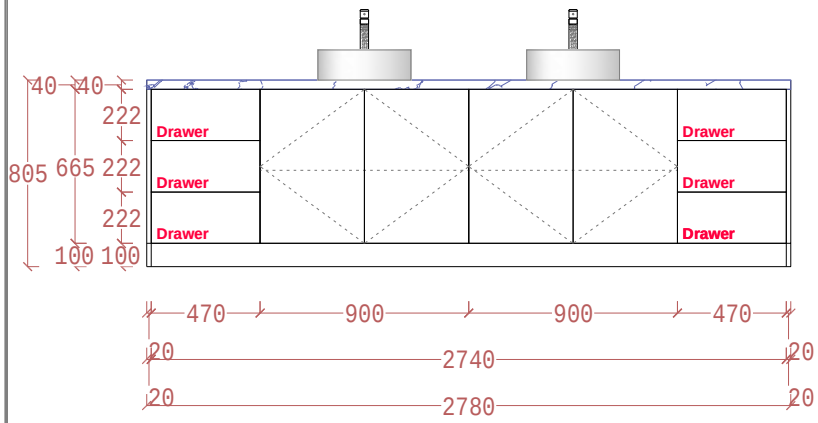

Material

Door1 : 18mm PB(GM6001乔木世家)

Carcass1 :18mm PB(GM6001乔木世家)

Handle :客户自备
Toe Kick:WOOD 木板（与柜体同色）全部独立地台
DRW&HNG : DTC soft close

ALL handles client-supplied.

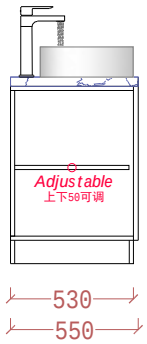

BENSON

DESIGN FIRM
Benson Cabinetry (Foshan) Co., Ltd.

This drawing is copyright
Contractors shall work from figured dimensions only
Contractors must check all dimensions on site
Contractors must be reported immediately to architects

Customer Signature

Project incharge signature

Approved by

Date:

A120 /BATHROOM VANITY

BENSON

DESIGN FIRM
Benson Cabinetry (Foshan) Co., Ltd.

This drawing is copyright
Contractors shall work from figured dimensions only
Contractors must check all dimensions on site
Contractors must be reported immediately to architects

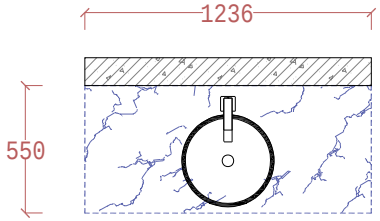

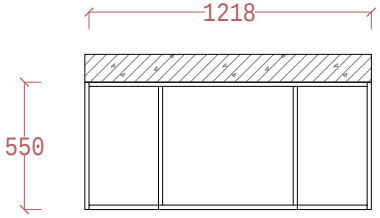

Material

Door1 : 18mm PB(GM6001乔木世家)

Carcass1 :18mm PB(GM6001乔木世家)

Handle :客户自备
Toe Kick:WOOD 木板（与柜体同色）全部独立地台
DRW&HNG : DTC soft close

ALL handles client-supplied.

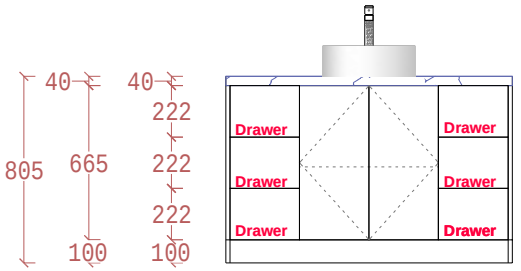

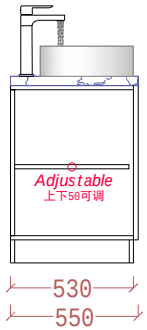

Customer Signature

Project incharge signature

Approved by

Date:

A120 /BEDROOM 3

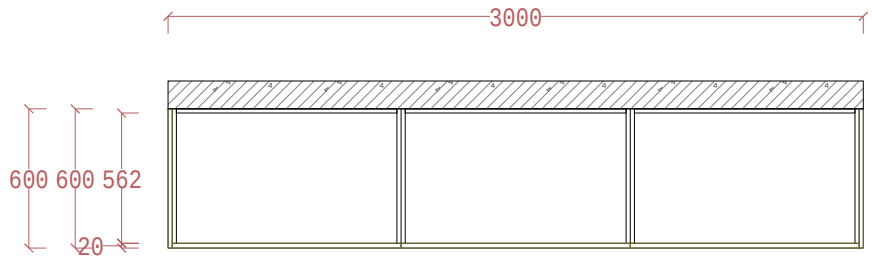

Material

Door1 : 18mm PB(GM6001乔木世家)

Carcass1 :18mm PB(GM6001乔木世家)

Handle :客户自备
Toe Kick:WOOD 木板（与柜体同色）全部独立地台
DRW&HNG : DTC soft close

ALL handles client-supplied.

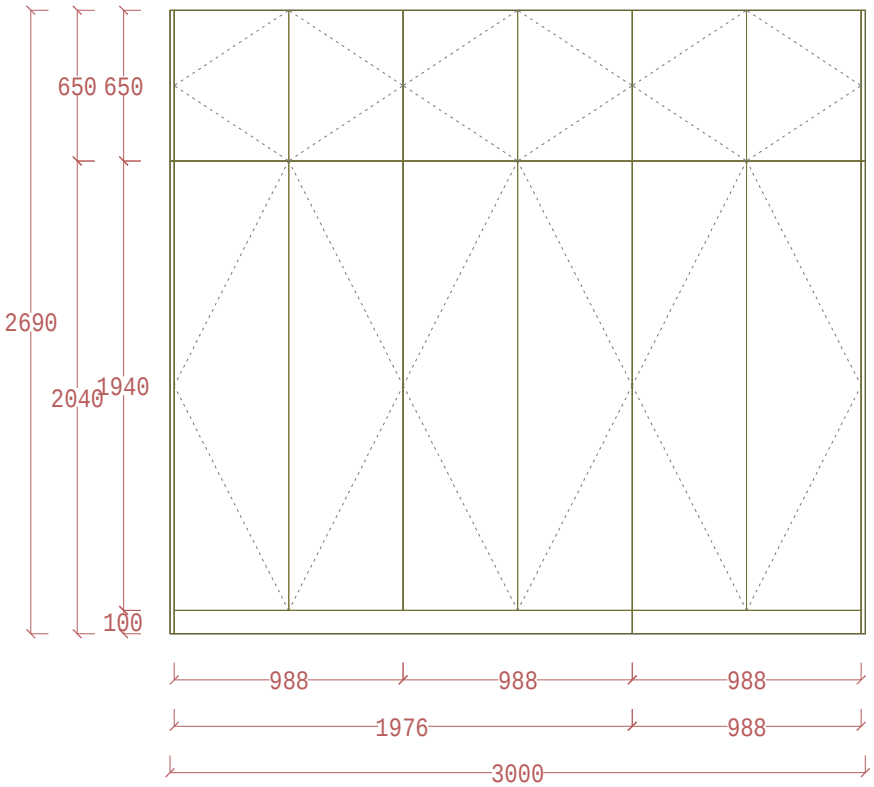

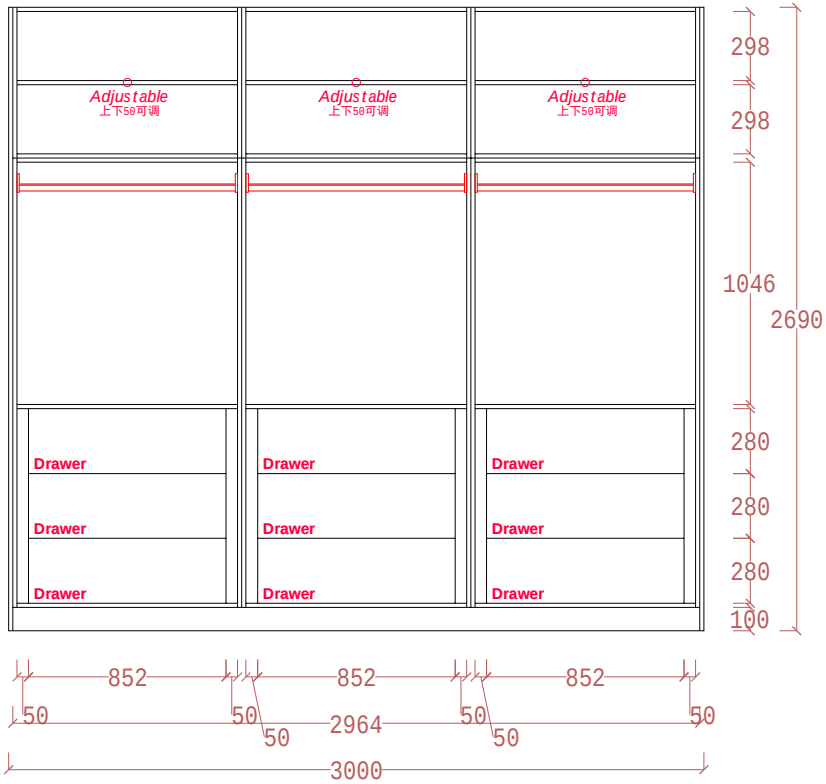

BENSON

DESIGN FIRM
Benson Cabinetry (Foshan) Co., Ltd.

This drawing is copyright
Contractors shall work from figured dimensions only
Contractors must check all dimensions on site
Contractors must be reported immediately to architects

Customer Signature

Project incharge signature

Approved by

Date:

A120 /BEDROOM 1

BENSON

DESIGN FIRM
Benson Cabinetry (Foshan) Co., Ltd.

This drawing is copyright
Contractors shall work from figured dimensions only
Contractors must check all dimensions on site
Contractors must be reported immediately to architects

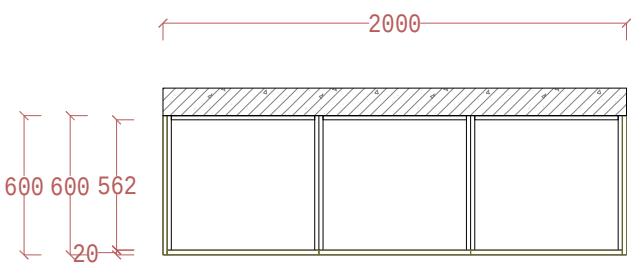

Material

Door1 : 18mm PB(GM6001乔木世家)

Carcass1 :18mm PB(GM6001乔木世家)

Handle :客户自备
Toe Kick:WOOD 木板（与柜体同色）全部独立地台
DRW&HNG : DTC soft close

ALL handles client-supplied.

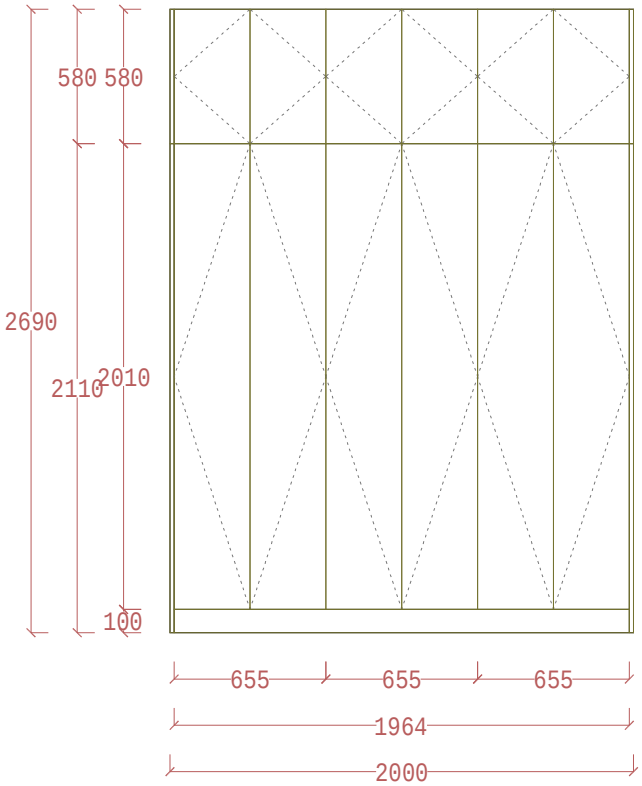

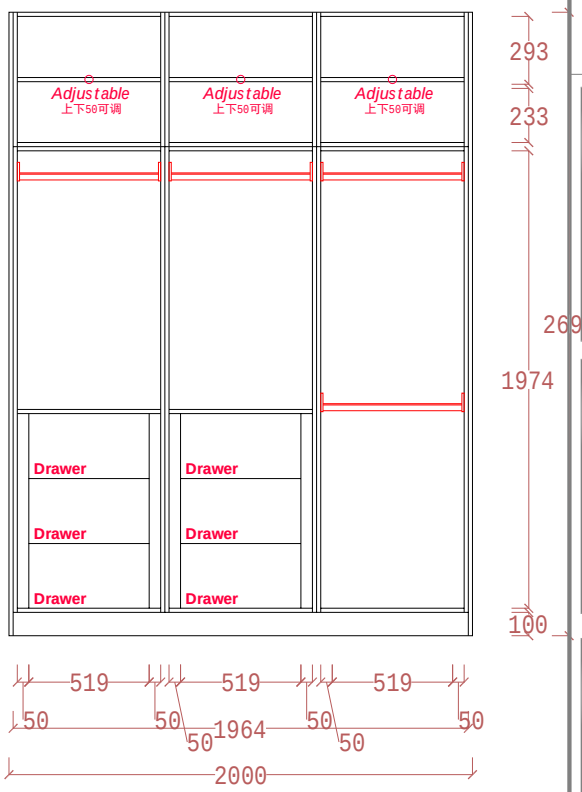

Customer Signature

Project incharge signature

Approved by

Date:

A120 /BEDROOM 4

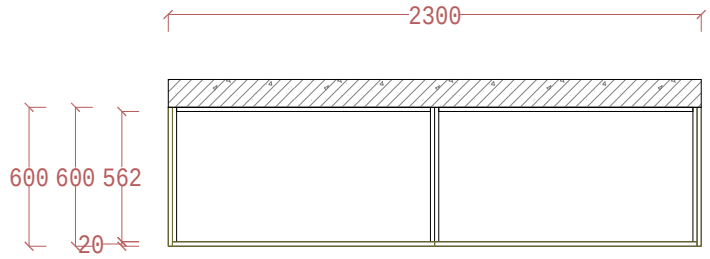

Material

Door1 : 18mm PB(GM6001乔木世家)

Carcass1 :18mm PB(GM6001乔木世家)

Handle :客户自备
Toe Kick:WOOD 木板（与柜体同色）全部独立地台
DRW&HNG : DTC soft close

ALL handles client-supplied.

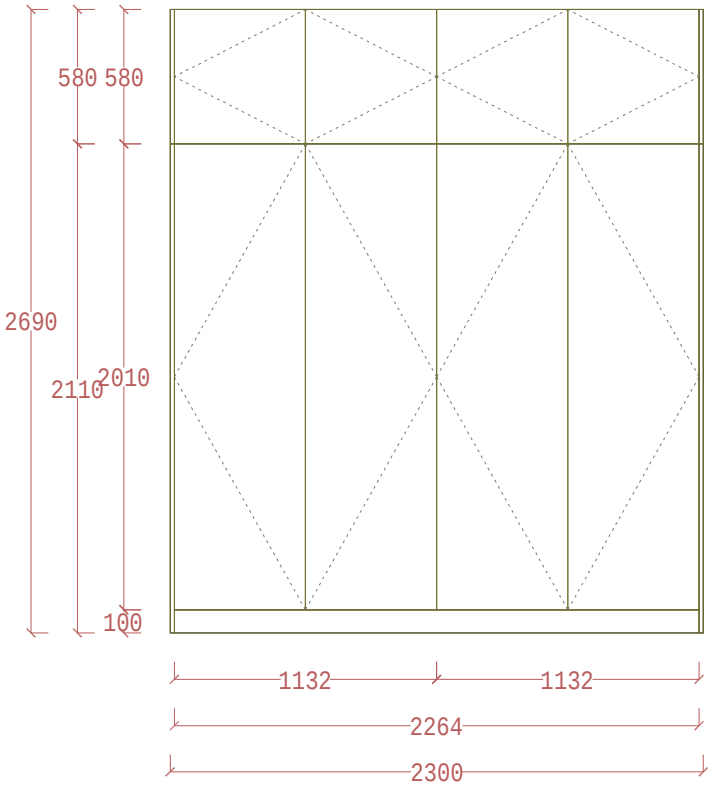

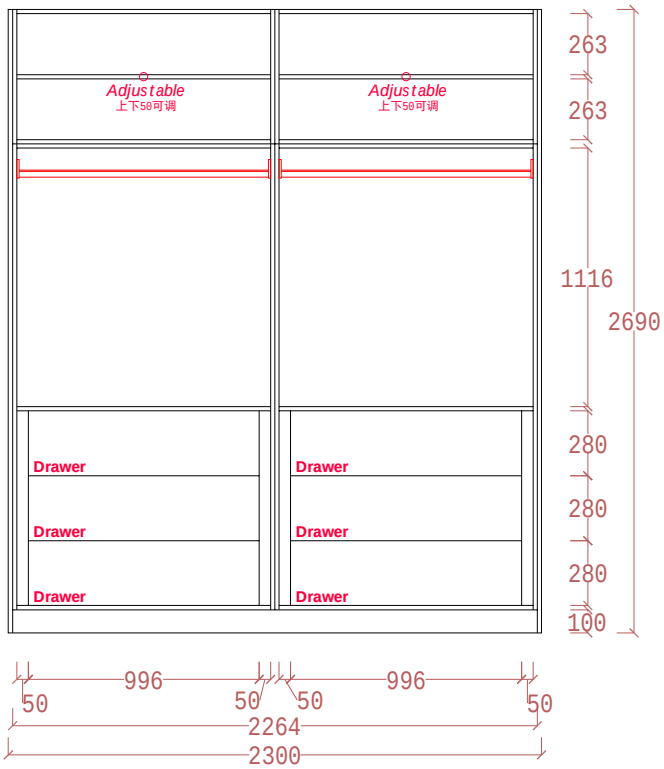

BENSON

DESIGN FIRM
Benson Cabinetry (Foshan) Co., Ltd.

This drawing is copyright
Contractors shall work from figured dimensions only
Contractors must check all dimensions on site
Contractors must be reported immediately to architects

Customer Signature

Project incharge signature

Approved by

Date: